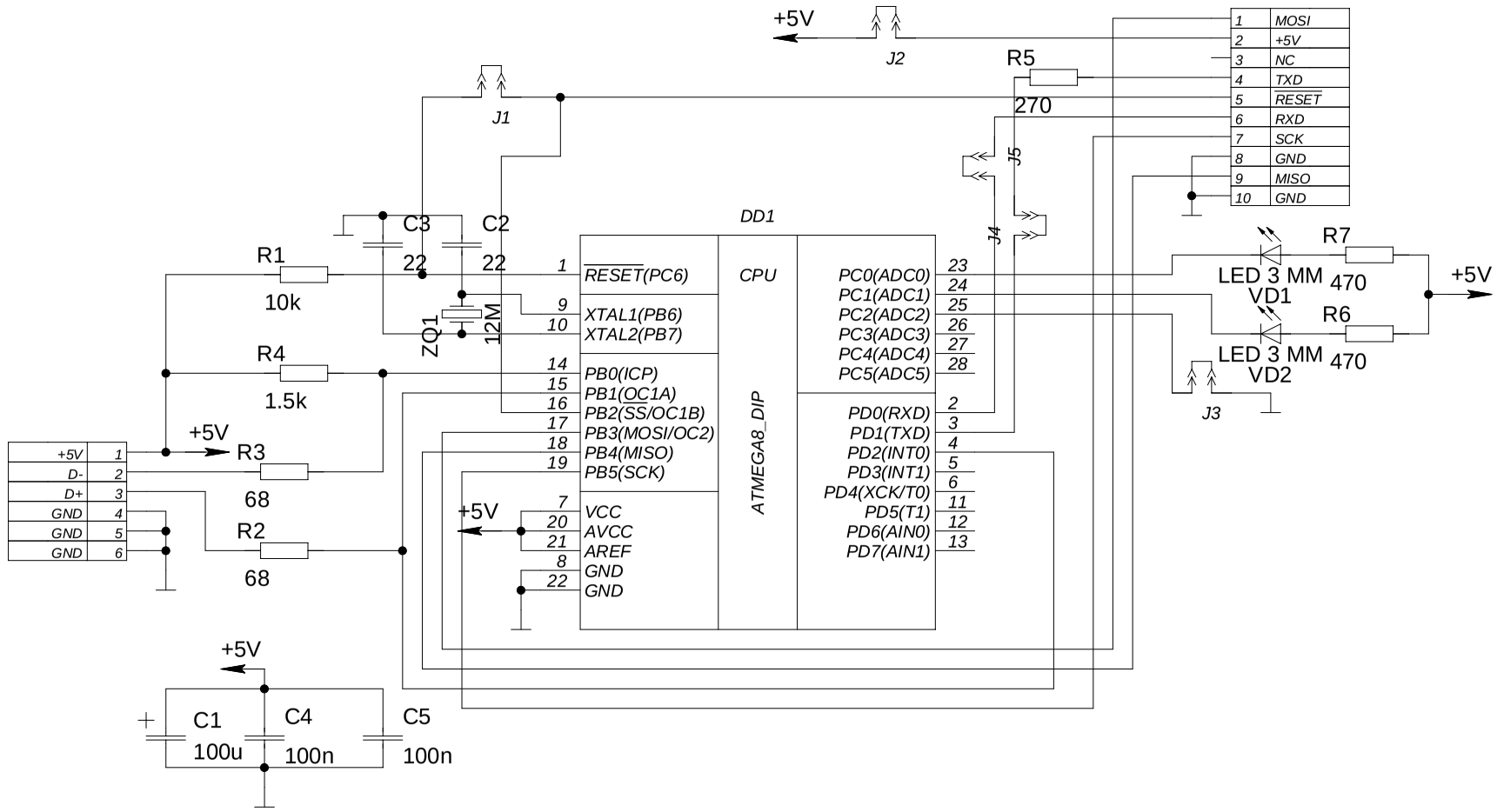
+5V
J2
R5
270
J1
J5
J4
DD1
C3
C2
22
22
R1
10k
ZQ1
12M
R4
1.5k
+5V
R3
68
R2
68
+5V
C1
100u
C4
100n
C5
100n
RESET(PC6)
XTAL1(PB6)
XTAL2(PB7)
PB0(ICP)
PB1(OC1A)
PB2(SS/OC1B)
PB3(MOSI/OC2)
PB4(MISO)
PB5(SCK)
VCC
AVCC
AREF
GND
GND
CPU
ATMEGA8_DIP
PC0(ADC0)
PC1(ADC1)
PC2(ADC2)
PC3(ADC3)
PC4(ADC4)
PC5(ADC5)
PD0(RXD)
PD1(TXD)
PD2(INT0)
PD3(INT1)
PD4(XCK/T0)
PD5(T1)
PD6(AIN0)
PD7(AIN1)
MOSI
+5V
NC
TXD
RESET
RXD
SCK
GND
MISO
GND
R7
470
LED 3 MM
VD1
R6
470
LED 3 MM
VD2
J3
+5V
D-
D+
GND
GND
GND